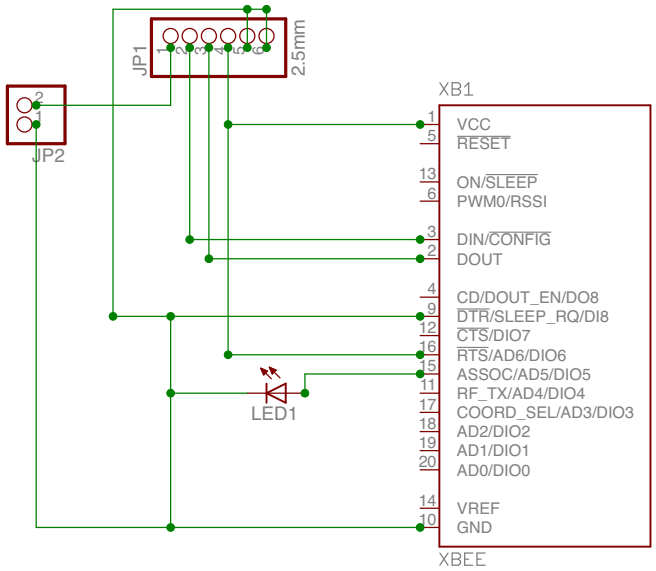
JP1
1
2
3
4
5
6
2.5mm
JP2
2
1
XB1
1 VCC
5 RESET
13 ON/SLEEP
6 PWM0/RSSI
3 DIN/CONFIG
2 DOUT
4 CD/DOUT_EN/DO8
9 DTR/SLEEP_RQ/DI8
12 CTS/DIO7
16 RTS/AD6/DIO6
15 ASSOC/AD5/DIO5
11 RF_TX/AD4/DIO4
17 COORD_SEL/AD3/DIO3
18 AD2/DIO2
19 AD1/DIO1
20 AD0/DIO0
14 VREF
10 GND
XBEE
LED1